Central Shield™ 150

Installation Details

RESIDENTIAL APPLICATION OVER SOLID DECKING

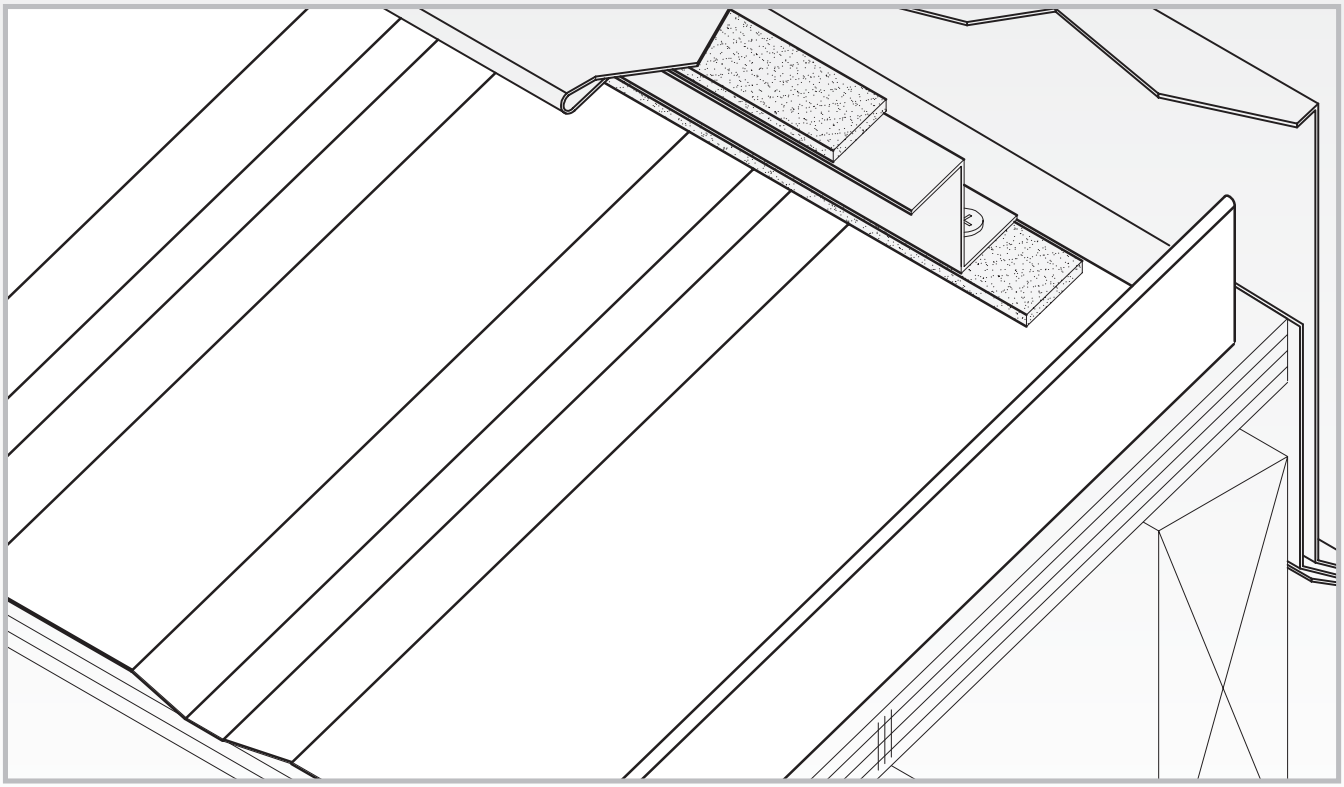

CENTRAL® STATES MANUFACTURING, INC.

METAL BUILDING COMPONENTS

INDEX

Information in this catalog may vary by plant location.
Please call your salesperson to verify product availability.

Important Information & Safety 3
Receiving, Handling and Tools 4-5
Field Cutting 6
Sealants and Fasterners 7
Roof Preparation and Install Overview. 8
Trim Selection. 9
Trim Installation, Adapting Instructions. 10
Eave/Flying Gable 11
Gutter 12
Valley 13
Panel Installation, Eave Termination 14-15
Zee Closure Installation (Less than 3:12 pitch) 16-17
Zee Closure Installation (3:12 pitch and above) 18
Pitch Change 19
Gable/Rake 20
Ridge/Hip. 21
High Eave 22
Endwall 23

NOTICE: *The application and detail drawings in this manual are strictly for illustration purposes and may not be applicable to all building designs or product installations. This document illustrates conditions and details that are recommended for this product to minimize the number of potential water penetrations. Each project may have specific situations in which alternate methods may be acceptable. A qualified contractor is able to adapt methods to a particular project. Projects should conform to local building codes. Central States Manufacturing is not responsible for the performance of the material if it is not installed correctly.*

Information contained in this booklet was in effect at the time of publication and is subject to change without notice.

IMPORTANT INFORMATION

This manual contains suggestions and guidelines on how to install Central Shield 150 panels. The drawings in this guide are for illustration purposes only and may not apply to all building designs or product applications. The installation details shown are proven methods of construction, but are not intended to cover all instances, building requirements, designs, or codes. It is the responsibility of the designer/installer to ensure that the details meet particular building requirements. The designer/installer must be aware of, and allow for, expansion/contraction of roof panels. The details may require changes or revisions due to each project's conditions.

There are certain minimum live, snow, dead, collateral, and wind loads that a roof must generally be designed to support. Consult local building officials to determine the appropriate building design load requirements. A professional engineer should be consulted for all roof system designs. It is the buyer's responsibility to verify all applicable code requirements, check all measurements, and determine suitability of product for the job. The buyer is also responsible for determining lengths and quantities needed. Prior to ordering and installing materials, all dimensions should be verified with field measurements. **Implied warranties of merchantability and fitness for a particular purpose are disclaimed.** All Central Shield 150 instructions assume that a qualified firm or individual has been contracted regarding application of this product. Failure to comply with stated recommendations relieves the manufacturer of responsibility for any damage or deterioration of the product incurred and voids any applicable warranty.

Central States Manufacturing reserves the right to modify, without notice, information in this guide. If you have questions regarding proper installation of Central Shield 150 or information not included in this guide, contact your salesperson.

TOOLS & EQUIPMENT

- Gloves
- Safety Glasses
- Snips/hand shear
- Tape Measure
- Chalk Line
- Electric Metal Shear
- Cordless Drill
- Sockets
- Caulking Gun
- Blind Rivet Tool
- 6" Hand Seamer
- Heaming Tool
- Notcher

We recommend that the installer have prior experience and knowledge of the listed tools and their uses in working with metal roofing.

SAFETY

Each job site presents different hazards; therefore it is the responsibility of the contractor to determine the safest way to install Central Shield 150 based on the recommended instructions contained in this guide and provide crew members with appropriate safety measures. If you must walk on a metal roof, take great care. Metal panels can become slippery, so always wear shoes with non-slip soles. Avoid working on metal roofs during wet conditions, when the panels can become extremely slippery. Walking or standing on a metal roof which does not have a plywood or other deck beneath it is not recommended. However, if you must do so, always walk on the purlins, never between.

OSHA safety regulations should be complied with at all times.



Always wear heavy gloves when working with steel panels to avoid cuts from sharp edges. If power cutting or drilling steel panels, always wear safety glasses to prevent eye injury from flying metal fragments.

RECEIVING & HANDLING

MATERIAL INVENTORY

Your material is carefully inspected and crated before leaving the plant and accepted by the transportation company as being complete and in satisfactory condition. It is the carrier's responsibility to deliver the shipment intact. It is the consignee's responsibility to inspect the shipment for damages and shortages when it is delivered.

Conducting a material inventory at the time of delivery is essential. By conducting the materials inventory, the erector is able to identify any material shortage or damage and avoid stopping installation later because of such shortage or damage.

It is imperative that any shortages or damage of the delivered materials be noted at once and clearly marked on the bill of lading before signature of acceptance. Notify Central States immediately of any conflicts. Central States will not be responsible for shortages or damages unless they are noted on the bill of lading.

In the case of packaged components (such as clips, fasteners and sealants, etc.), the quantities are marked on their container and should be checked against the bill of materials. Central States must be notified of any shortages or concealed damage within 15 days of delivery.

EQUIPMENT FOR UNLOADING AND LIFTING

Hoisting equipment is necessary to unload and position the panels and accessory crates for site storage and installation. The equipment must have sufficient capacity and reach to place the material where it is required for efficient installation.

Slings will be required to minimize panel damage. The recommended slings are nylon straps of 6" minimum width and of sufficient length to accommodate the panel bundle girth.

A spreader bar will be required for the longer panel crates to assure correct sling spacing and uniform lifting. The spreader bar must be large enough to handle the maximum panel bundle weight and length.

A forklift is handy for unloading and placing shorter panel and accessory crates.

LIFTING ROOF PANEL BUNDLES

Under normal conditions, panel crates less than 35' long can be lifted with two slings spaced at third points. Panel crates longer than 35' can be lifted with three slings located at quarter points using a spreader bar to achieve correct sling spacing for uniform lift.

Slings should be located under the cross boards. Loads should always be checked for secure hook-up, proper balance, and lift clearance. Tag lines should be used if necessary to control the load during lifting, especially if operating in the wind.

Panel crates less than 25' long may be lifted with a forklift only if the forks are spread at least 5' apart and blocking is used to prevent panel damage by the forks.

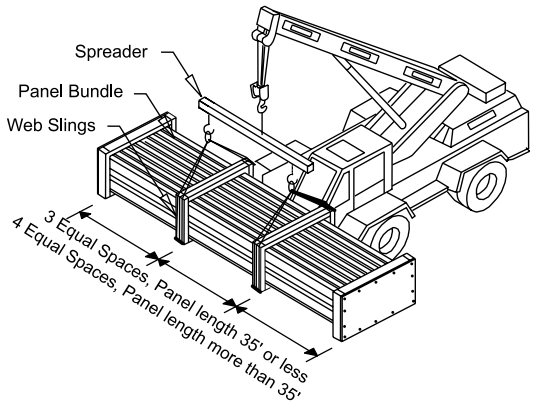

Panels over 25'

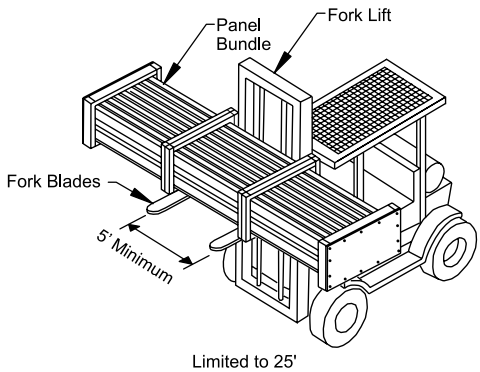

Limited to 25'

*For illustration only. Actual packaging may differ from drawing.

RECEIVING & HANDLING

FIELD STORAGE

Upon acceptance of the shipment, the customer or his representative is responsible for proper handling storage and security of the roof materials. Central-States is not liable for damage or loss of materials at the job site.

The roof panel bundles should be stored on the job site in accordance with the following recommendations:

A. Store panels in a protected area, out of standing water and drifting snow, etc.

B. Elevate panels with blocking to allow air circulation under the bundle.

C. Slope panels for drainage of moisture from the panels.

D. As necessary, cover panels with waterproof tarp, allowing for air circulation (do not wrap tarp under panel crate or restrict air movement).

E. Inspect panels daily for moisture accumulation.

F. If panel bundles contain moisture, the panels should be dried and re-stacked. Use care in re-stacking to avoid damage to panels.

G. Opened or re-stacked panel bundles should be secured to prevent wind damage.

When moving panel bundles, extreme caution should be taken to prevent damage to the panel edges. Uncrated panels should be supported at each end and at 10' spaces.

All bundles or loose panels on the roof should be banded to the roof structurals at the end of each workday. On steep roofs, provisions should be taken to prevent panels and panel crates from sliding off the roof. Be sure to set panel bundles on the roof in the proper direction for the installation sequence.

Trim and accessories should be stored in a secure area and protected from damage, weather, and theft. Fasteners, sealants, closures, etc., should be stored out of the weather and protected from contamination.

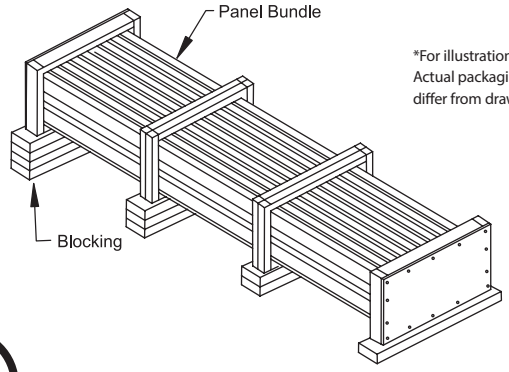

*For illustration only. Actual packaging may differ from drawing.

TIP Stack blocking so bundle is sloped for drainage.

HANDLING INDIVIDUAL ROOF PANELS

To lift individual panels, lift one side of the panel by the seam letting it hang naturally to prevent buckling. Pick-up points should not be more than 10' apart.

Do not pick-up panels by the ends only, or in a flat position.

If the individual panels are to be lifted to the roof by hand line, the common method is to use the vice grip "C" clamps. Position the clamps on the flat of the panel as close as possible to one edge so the panel is lifted in a vertical position. The jaws of the vice grips must be padded to prevent damage to the panel surface. The clamps should be uniformly spaced, no more than 10' apart and the hand lines must be pulled in unison so that uneven lifting does not buckle the panel. Be sure the clamps are tight on the panel and the line is secure to prevent dropping the panel which can result in personal injury and property damage.

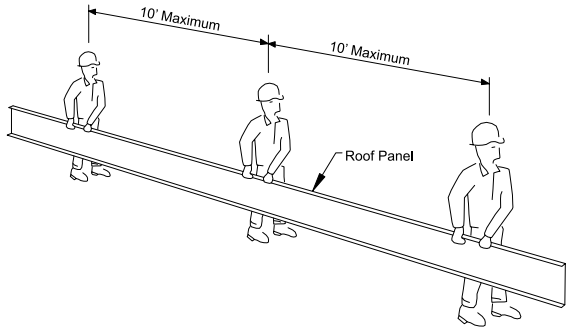

FIELD CUTTING

Central States recommends tin snips/hand shears, electric nibblers or a profile shear to cut metal panels and trim. All product surfaces should be free of debris at all times. Installed surfaces should be wiped clean at the end of each work period. Never cut panels over metal surfaces. When cutting metal panels, always wear heavy gloves to avoid cuts from sharp edges and safety glasses to prevent eye injury.

Central States discourages the use of a power saw that may generate hot metal shavings. Hot shavings can stick to the painted surface. If loose shavings are not removed from the panel surface immediately they will begin to corrode and shorten the life of the product. One method of preventing this problem is to flip the panel over when cutting and only cut one panel at a time. This allows you to brush shavings off of the back of the panel and helps to avoid damaging the painted finish. Make sure that stacks of panels are away from the cutting area so shavings do not blow onto other panels.

SHEARING METHODS

It is recommended that panels and flashing be cut with shears to provide a clean, undamaged cut. On shear cut edges, the protective coating extends to the edge of the cut and is often wiped over the edge to further protect the base metal. Whenever possible, fit the material so that the factory cut edge is exposed and the field cut edge is covered.

When field cutting complex shapes, it is usually easier to cut out a 1" wide strip using both left and right hand shears. The 1" cutout provides clearance to smoothly cut the flats and the clearance to work the shears around tight corners.

When making repetitive cuts (such as cutting panels at a hip condition) it is recommended that a template be made from a piece of drop-off panel or flash to provide fast and accurate marking of the field cut. When using panel material for the template, cut off the top portion of the panel ribs so that the template is easily laid onto the panel being marked.

MARKING PANELS

Avoid marking the panels for cutting, etc., in a manner that will leave visible markings and stains, etc., on the finished roof surface. Use chalk or felt tip ink markers. Do not use graphite (lead) pencils on unpainted panel surfaces, the graphite can cause rusting of the surface.

Shavings created by saw cutting may cause the panel to rust and could result in product failure that is not covered by manufacturers warranty.



SEALANTS

TEMPERATURE EFFECTS

Temperature extremes must be considered during installation of the roof due to the sensitivity of sealants. The recommended installation temperature range is 20º F to 120º F. At colder temperatures, the sealant stiffens resulting in loss of adhesion and compressibility. At hotter temperatures, the sealant becomes too soft for practical handling. On cold but sunny days, the panel's surface may become warm enough to accept the application of a heated sealant even though the air temperature is below 20º F.

When overnight temperatures fall below freezing, the sealant should be stored in a heated room so it will be warm enough to use the following day. On hot days, the sealant cartons should be stored off the roof in a cool and shaded area. While on the roof, sealant rolls should be kept shaded until actual use.

In very cold weather, it is recommended that the fasteners be tightened slowly and only tight enough that the sealant is in full contact with the panel or flashing. Then on the next sunny day, complete the tightening process after the sun warms the panel and flashing surfaces.

CONTAMINATION

To assure proper adhesion and sealing, the sealant must have complete contact with adjoining surfaces and achieve 30% compression. Before applying tape sealant, the sealant should be checked for contaminants. Do not remove the protective paper until immediately before the panel or flashing is installed over the sealant.

COMPRESSION

To assure proper adhesion and seal, the tape sealant must be compressed between the panel and flashing surfaces with firm and uniform pressure. In most cases, the required pressure is applied by the clamping action of screws pulling the adjoining surfaces together. However, the tape sealant's resistance to pressure

FASTENERS

INSTALLATION

Before starting the screw, the materials to be joined must be pressed together with foot or hand pressure. The pressure must be maintained until the screw has drilled through all the materials and the threads have engaged.

Most self-drilling screws require 20 pounds of pressure to maintain the drilling action and to start the thread cutting action. Also, applying such pressure before starting the screw gun will usually prevent tip walking or wandering.

If too little pressure is applied, the drill point may not cut into the metal and the point will heat up and become dull. If the pressure is too heavy, the bottom material may be deflected away, causing a standoff condition, or the drill tip may be broken or split.

Screws must be held perpendicular to the panel or flashing surface during starting and driving.
For proper seating of the fastener-sealing washer, the panel or flashing surface must be clean and drill shavings must be removed from under washers before seating. The fastener must be driven perpendicular to the panel surface so that the washer can seat level without warping or cupping.

As a good installation practice, all roof installers should carry approved oversized screws. Upon stripping or breaking a screw, the screw must be immediately removed and replaced with the appropriate oversized screw. Do not defer the screw replacement to be remembered and fixed later, or to be found by the clean-up crew. The majority of such screws will be overlooked until the customer complains of leakage.



Do not over drive screws. Over driving can strip the threads and/or damage the sealing washer. Use a screw gun with torque control set to function properly for the combination of fastener size, hole size and material thickness.

ROOF PREPARATION

Central Shield 150 can be installed over solid decking. Do not install over open framing or purlins. Do not install over an existing asphalt shingle roof. It is the responsibility of the contractor to ensure a suitable substrate prior to the application of Central Shield 150.

Substructures should be designed to meet all necessary code requirements. Green lumber is not recommended as moisture can damage the metal panels and cause fasteners to back out.

SOLID DECKING

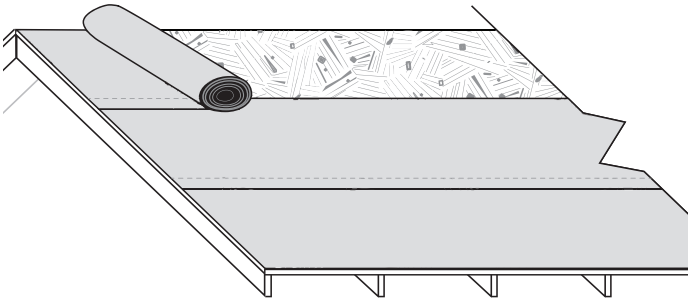

1. Make sure decking is smooth, level and in good condition. Remove any debris that might interfere with installation.
2. Apply 30 lb. felt or synthetic underlayment using nails or staples.
3. Check for roof squareness.
4. Begin installation of trim and panels.

INSTALLATION OVERVIEW

Familiarize yourself with all installation instructions before starting work. Before beginning installation, you should examine the substrate or framing to ensure that all supporting members are straight, level, and plumb to avoid any panel distortion.

Substructures should be designed to meet all necessary code requirements. Some field cutting and fitting of panels and trims is to be expected by the installer and minor field corrections are a part of normal installation work.

It is the responsibility of the installer to ensure a suitable substrate prior to the application of Central Shield 150. Distortion in the panel caused by an uneven substrate, ripples, or laps in the vapor barrier, debris, protruding nails and staples, etc., are not defects in the materials and are not the responsibility of Central States Manufacturing.

All trims, closures, and accessories shown on the installation drawings are available from Central States Manufacturing unless noted otherwise.

Oil canning in the flat area of the panels is an inherent property of metal panels, and does not affect the integrity of the panel. Therefore, oil canning is not a reason for rejection. The panels should be installed plumb, straight, and square to the eave. To keep the bottom edge of the roof perfectly straight and even, the panels must be installed square to the bottom edge. Begin by checking the roof for square; if it is square, you may pull the layout marks directly from the edge of the rake.

If the roof isn't perfectly square, install the first panel parallel to your square line, making sure that the first rib does not hang over the gable edge of the roof sheathing. (Any overhang can prevent the gable trim from fitting tight against the rake.)

Install gutters first as the gutter trim goes under all other trims and panels. **TIP**

TRIM SELECTION

Unless otherwise noted, all trims are 24ga. and 26ga. and all angles are 90° or 45°.
Trim subject to change. A current product guide with dimension, girth and pitch information can be found at centralstatesco.com/resources

*Specify pitch when ordering.

ZEE CLOSURE / VENTED ZEE

SCZC - Girth 3.75" SCVZC - Girth 3.75"

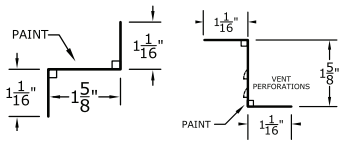

ENDWALL*

CFSI - Girth 7.75"

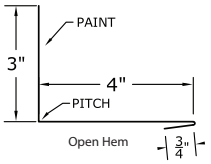

EAVE*

RDC - Girth 9.5"

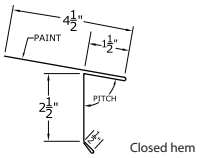

CLEAT

SCCL - Girth 4.5625"

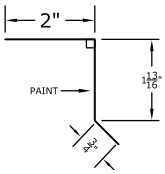

OPEN HEM RIDGE CAP*

CFRC - Girth 14"

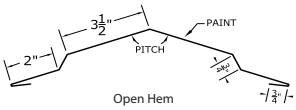

OPEN HEM FLAT RIDGE*

CFFRC - Girth 17.5"

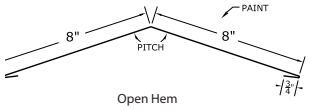

OPEN HEM WIDE RIDGE*

CFWRC - Girth 18"

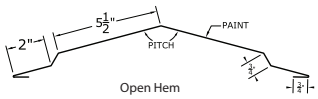

GABLE

SCRA - Girth 9.75"

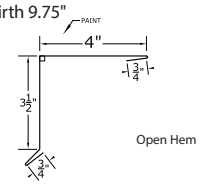

VALLEY*

CFVT - Girth 20.25"

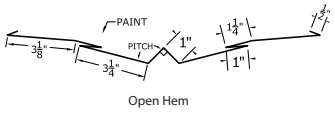

VALLEY*

SCVT1 - Girth 20.75"



WIDE VALLEY*

SCWVT - Girth 31"

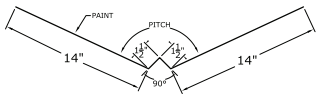

VALLEY CLEAT

SCVC - Girth 5.5"

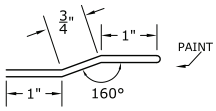

TRANSITION*

CFGA - Girth 12.75"

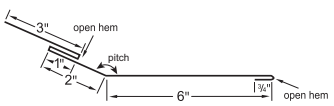

HIGH EAVE/GABLE*

SCGA5 - Girth 12"

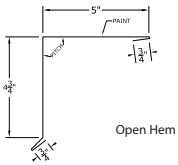

RAKE CLIP

SCCLP - Fixed Clip

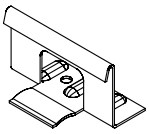

BOX GUTTER

SNGU

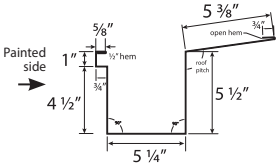

COUNTERFLASH*

SSCF - Girth 4.5"

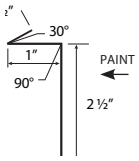

CONTINUOUS CLEAT

SSCC - Girth 3"

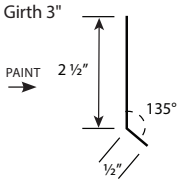

FASTENERS

Fastener color availability may vary by location, contact your sales consultant for details. Order fasteners in increments of 250 pieces.

TYPE	PART #	LENGTH	DIAMETER	HEAD	COLOR	#BAG
METAL/METAL	114(color)ZACMM	1-¼"	#12	5/16" Hex	all	250
METAL/METAL LAP	78(color)ZACLAP	7/8"	#14	5/16" Hex	all	250
PANCAKE HEAD DRILLER	12FASTENER	1"	#10	2/2 QUADREX	Galvanized	250
LOW PROFILE WAFER	1WFAST	1"	#10	#2 SQUARE DRIVE	Galvanized	250
METAL/WOOD CLIP	112SNWFAST	1-½"	#10	#2 SQUARE DRIVE	Galvanized	250
Pancake head fastener for panel clip & eave plate attachment to wood decking.						
POP RIVET	POP(color)	⅛"			all	100

TRIM INSTALLATION

On runs that require more than one length of trim, overlap the pieces by 2". The material is thin enough that the overlaps are not noticeable. Trim is attached with rivets or gasketed screws; take care to drive the screws enough to flatten the neoprene washer but not enough to deflect the roofing or the trim.

The tricky part is finishing the ends of each trim run. It may take a bit more time, but cutting and folding the ends of the trim will give the roof a more finished look.

When hooking the hem, measure over on hem 3" from end of trim piece. Cut hem 1/8" up from the bend to 3" mark. Cut off back of hem. On lap piece, open up hem with screwdriver. Insert piece. Slide together. Use rivets and sealant on lap where needed.

Remove strippable film from trim before installation.

TIP

ADAPTING INSTRUCTIONS

The illustrations and instructions are presented in this guide are for conditions below 3:12 pitch. The installer has flexibility to adapt the methods shown in this book to meet the needs of a particular project.

For conditions 3:12 and above, or for aesthetics, the installer may choose to engage the hems and use less pop rivets. Water penetration should not be a concern using this method because of the higher pitch.

EXAMPLE OF GABLE/RAKE TRIM

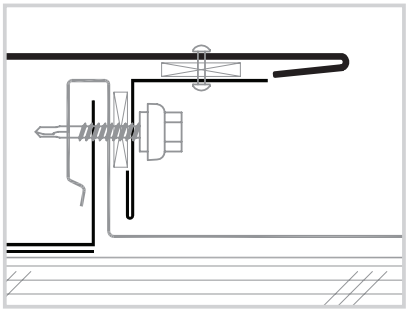

BELOW 3:12 PITCH
This method uses butyl tape and an unengaged hem to prevent water penetration, and allow for thermal movement.

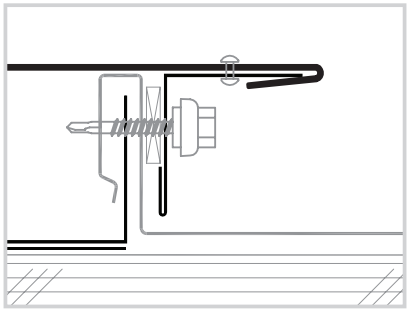

3:12 PITCH AND ABOVE
For this method, follow the instructions provided, but instead of using butyl tape and pop rivets, engage the hem into the trim support piece. Use pop rivets as necessary.

EAVE/FLYING GABLE DETAIL

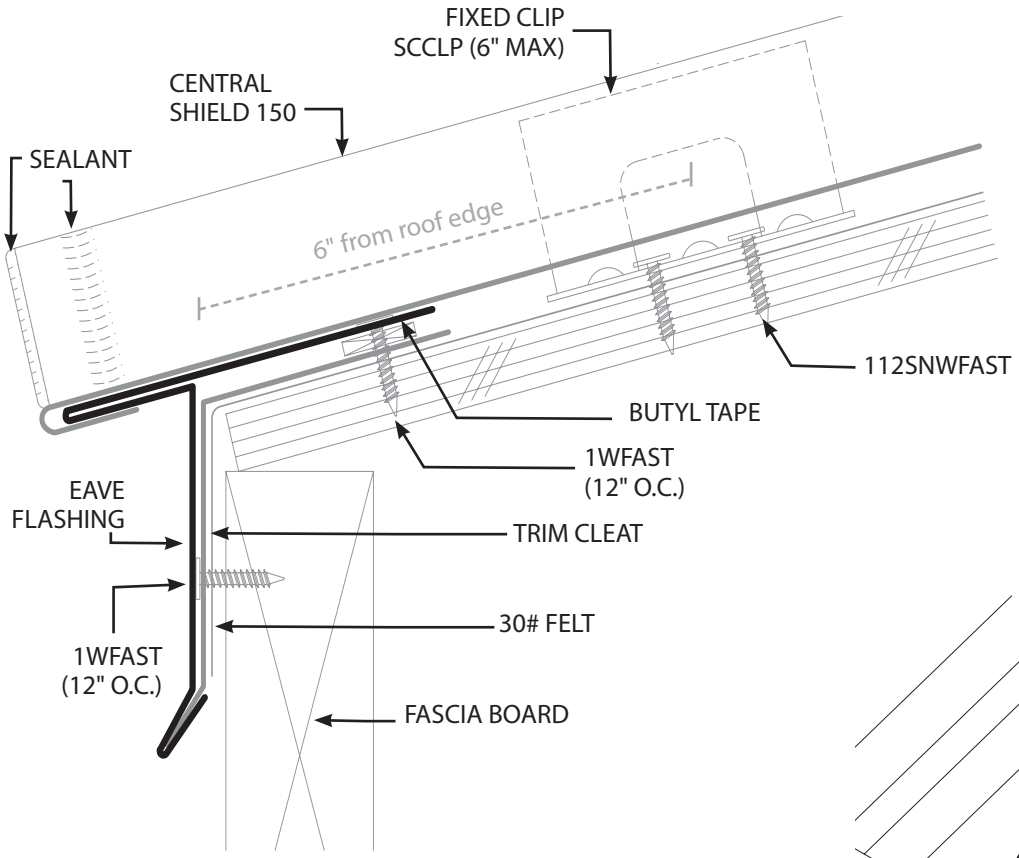

EAVE FLASHING
RDC

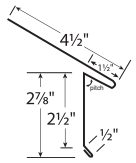

TRIM CLEAT
SNTC

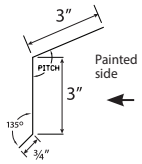

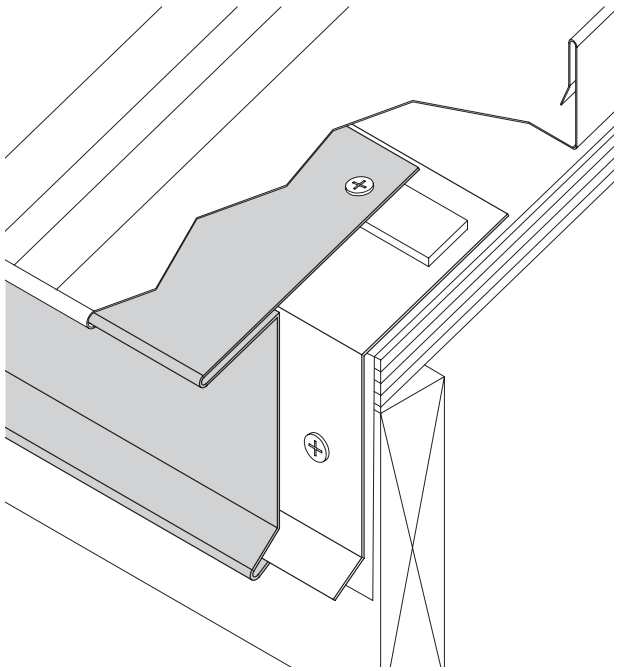

TIP

The first panel can be hemmed at 180 degrees. Because of the mastic in the female rib, sliding the panel may be difficult so, for subsequent panels, hem the panel at 90 degrees, engage the panel onto the eave flashing, lay the panel (engaging the male/female joint near the eave and working up slope), then finish the hem to 180 degrees.

1. Apply the trim cleat to the eave, on top of the underlayment, and fasten to the fascia side using 1WFAST at 12" O.C.
2. Place the butyl tape sealant atop the trim cleat on the roof side.
3. Engage the eave flashing onto the trim cleat and fasten through the eave flashing, butyl tape, and trim cleat into the substrate using a 1WFAST at 12" O.C
3. Hem the notched panel using the folding tool. See tip for hemming. Place a 3/8" bead of sealant over the male rib and then fill the void of the female rib with sealant.
4. Place the center of the first panel clip at 6" O.C. and fasten with 2 each 1WFAST.

GUTTER DETAIL

INSTALL GUTTER TRIM FIRST

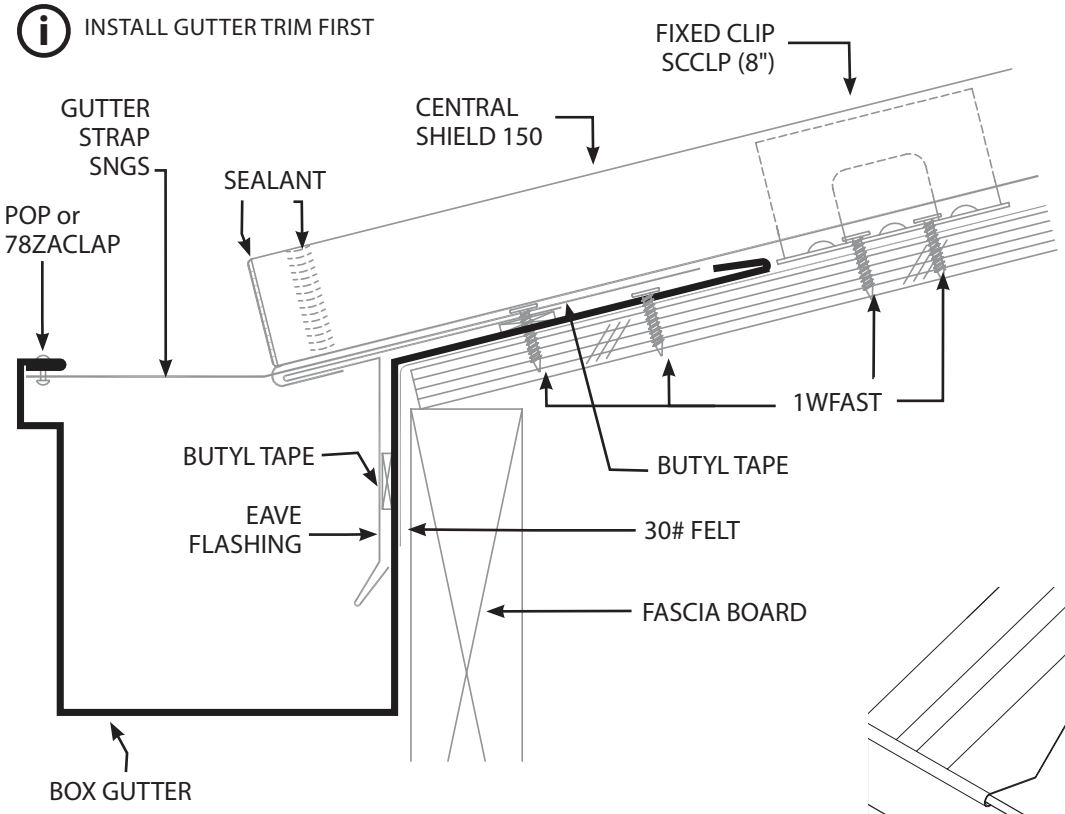

BOX GUTTER
SNGU

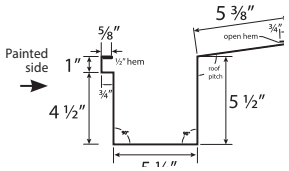

EAVE FLASHING
RDC

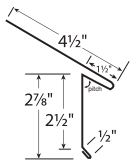

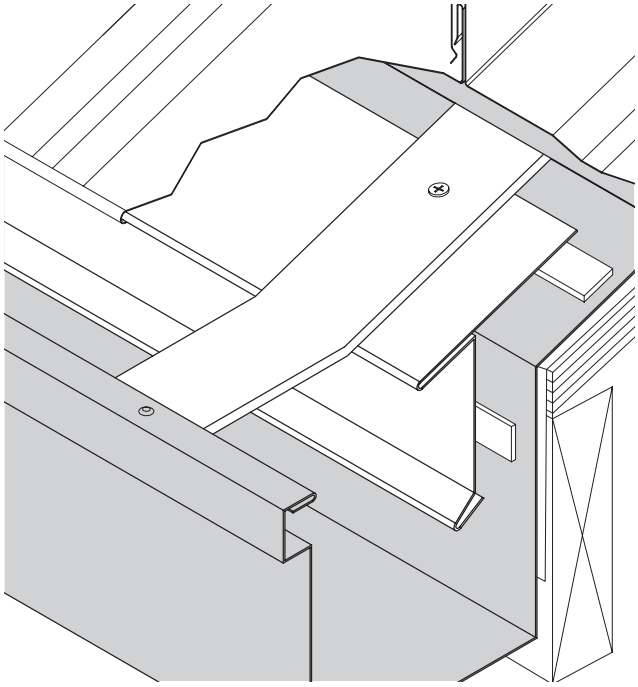

FIGURE 1. Gutter Strap

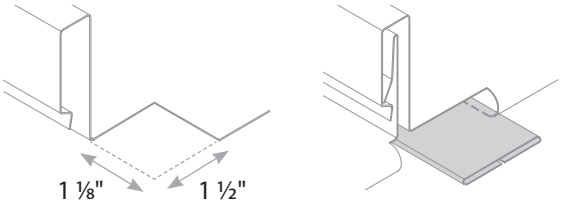

1. Apply the gutter to the eave, on top of the underlayment, and fasten to the roof side using 1WFAST at 12" O.C.

2. Place the butyl tape sealant atop the roof leg of the gutter and to the eave side of the interior of the gutter.

3. Install the eave flashing onto the gutter trim and fasten through the eave flashing, butyl tape, and box gutter into the substrate using 1WFAST at 12" O.C.

4. Referring to Figure 1, cut away a 1 ½" from the factory notch, then hem the panel. Cut an adequate amount of gutter strap stock aligning with the edge of the gutter trim. Fasten the gutter strap under the panel in the area of the cut away section using one 1WFAST on the roof and 1 pop rivet at the gutter.

5. Place a 3/8" bead of sealant over the male rib and then fill the void of the female rib with sealant. Place the center of the panel clip at 8" O.C. and fasten with two 1WFAST. See tip for hemming.

VALLEY DETAIL

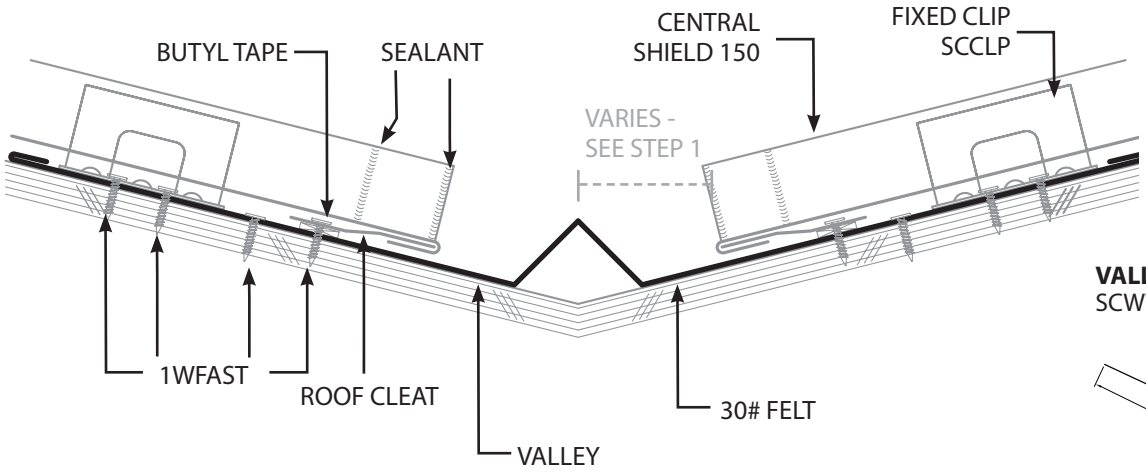

VALLEY
SCWVT

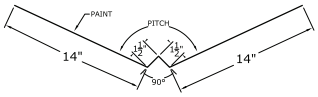

VALLEY
CFVT

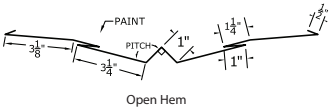

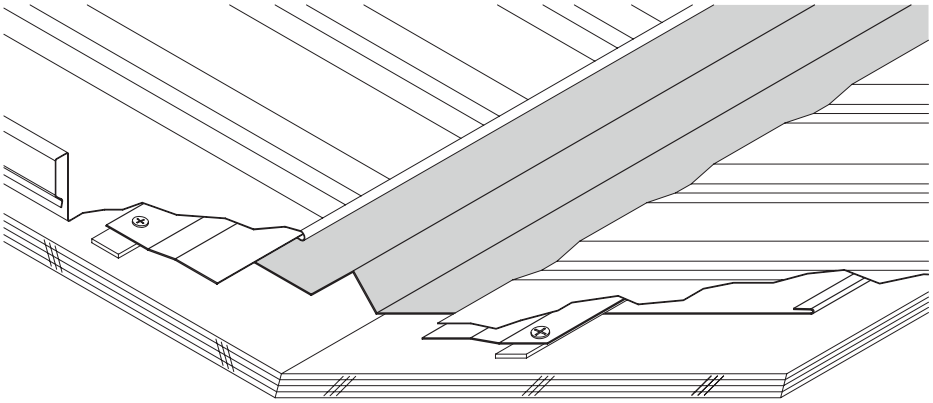

VALLEY
SCVT1



VALLEY CLEAT
SCVC

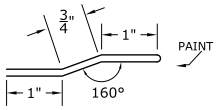

1. At the valley condition, seat the valley trim and fasten on either side at 12" O.C., placing the fasteners behind the area where the roof cleat will be placed.
   - If the valley length is 30' or less place a line of butyl tape so that when the roof cleat is fastened to the valley pan and the panel is secured, there is 4 ½" between the end of the panel and the valley diverter.
   - If the valley length is over 30', there needs to be aprox. 9" between the panel end and the valley diverter.
2. Secure the hemmed Central Shield 150 panel onto the roof cleat. Place a 3/8" bead of sealant over the male rib and then fill the void of the female rib with sealant.
3. Keep the opposite end of the panel raised to help engage the end of the panel onto the roof cleat, then seat the female end of the panel over the male and engage the panel working from the valley trim and working up the slope.

PANEL INSTALLATION

1. Snap a chalk line at the rake edge and install rake supports. The female edge of the first hemmed panel should lap over the rake support, and at the panel end hook onto the roof cleat or eave flashing.

2. Check panel alignment. If panel is properly aligned proceed by installing clips on male edge.

3. Align the second panel female edge with the starter panel male edge. Panels must be flush to one another. Remember, panels should hook onto the roof cleat or eave flashing.

4. Lightly compress and snap panels together at seam. Snap panels from eave to ridge. Put next set of clips in place.

5. Continue to apply panels as in previous steps.

6. Panels at the eave can be terminated in two ways; with fasteners and without. Each will depend on aesthetic consideration determined by the installer or building owner.

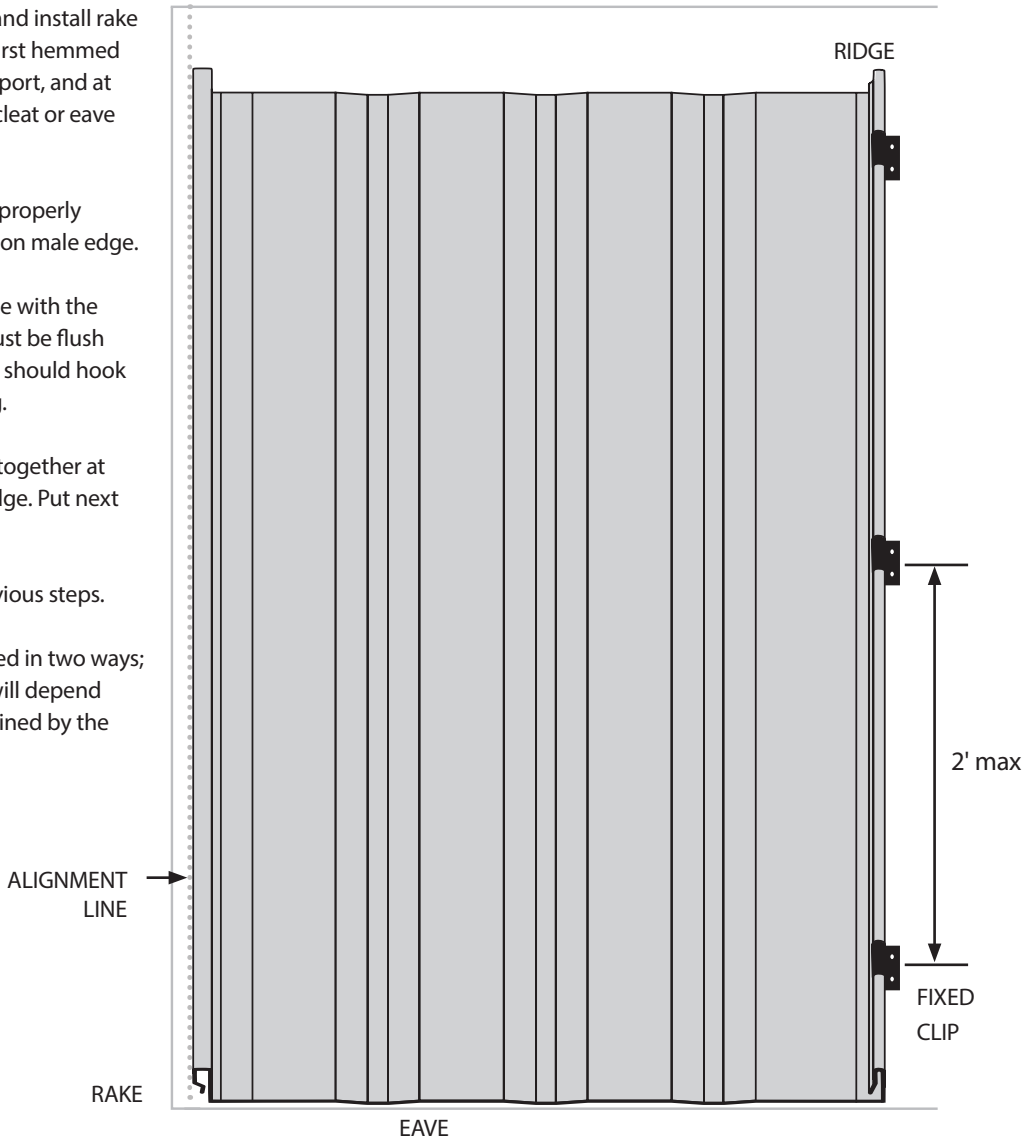

FASTENER SPACING

Maximum clip spacing 24" on center with passing uplift pressure of 52.5psf for 26ga and 86psf for 24ga.

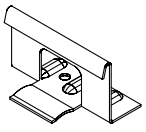

FIXED CLIP
SCCLP

EAVE TERMINATION

NOTE: Panels must be notched in the field.

STEP 1:

Place the hemming tool over the notched tab in the panel.

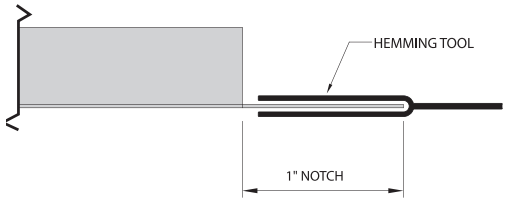

STEP 2:

FOR EAVE CONDITIONS:

Using hemming tool, bend the tab down 90° to engage eave flashing (position 1), using the lip on the eave flashing to secure the panel in place at the eave as shown on page 10. Then hand finish the hem to 180°.

FOR TRANSITION AND VALLEY CONDITIONS:

Using the hemming tool, bend under to 180° (position 2).

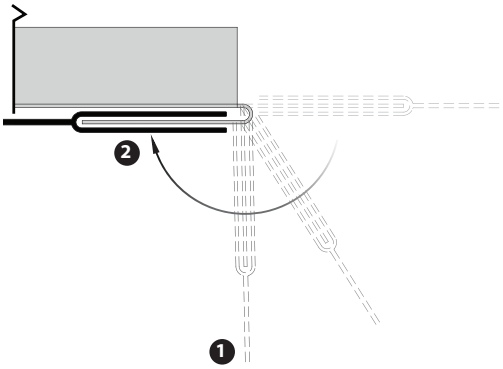

EXAMPLE OF FINISHED HEM OVER EAVE FLASHING

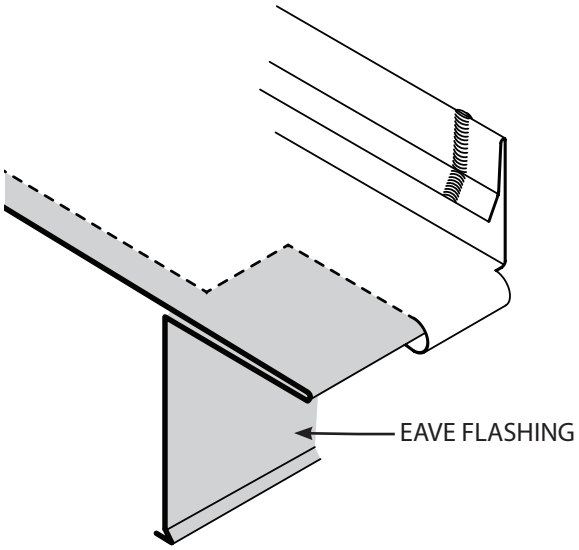

INSTALL ZEE CLOSURE

OPTION 1 LESS THAN 3:12 PITCH

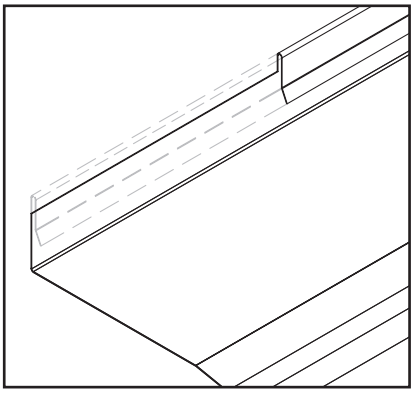

STEP 1

Remove the top most edge of the male side of the panel as needed to seat the zee closure as it aligns with the ridge cap.

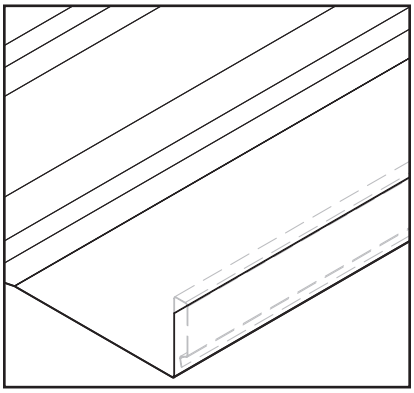

STEP 2

Remove the top most edge of the female side of the panel as needed to seat the zee closure as it aligns with the ridge cap and male rib.

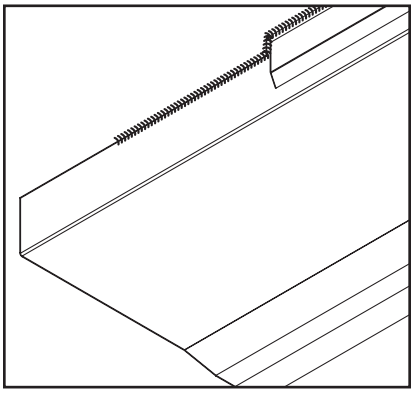

STEP 3

Run a line 3/8" bead of sealant approx. 3" before and after the male/female end lap

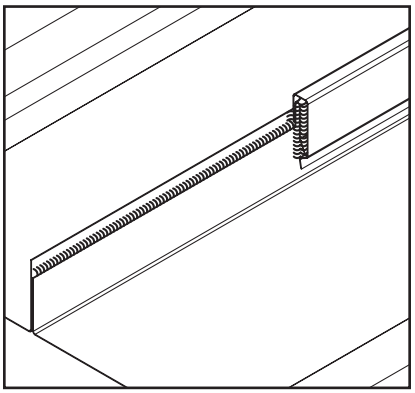

STEP 4

Fill the void at the male/female end lap joint and along the cut edges with sealant.

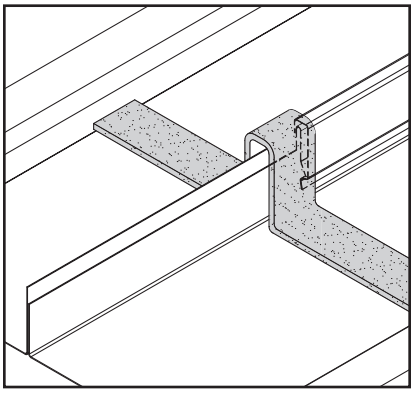

STEP 5

Apply mastic tape in a continuous line from the starting point to ending point of the zee closure line being sure to roll the mastic into the corners and striations to alleviate the chance for voids. The tape can't be stretched to forced into place. Cut butyl tape with snips or other cutting tool.

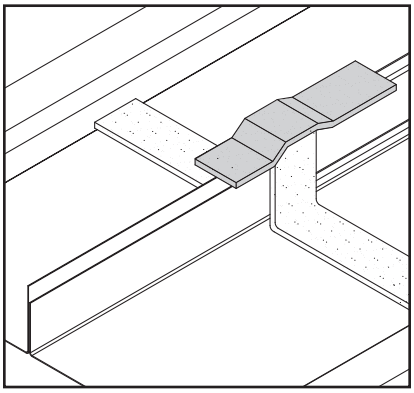

STEP 6

Place a piece of mastic tape, pigtail, over the cut joint and closure tape line

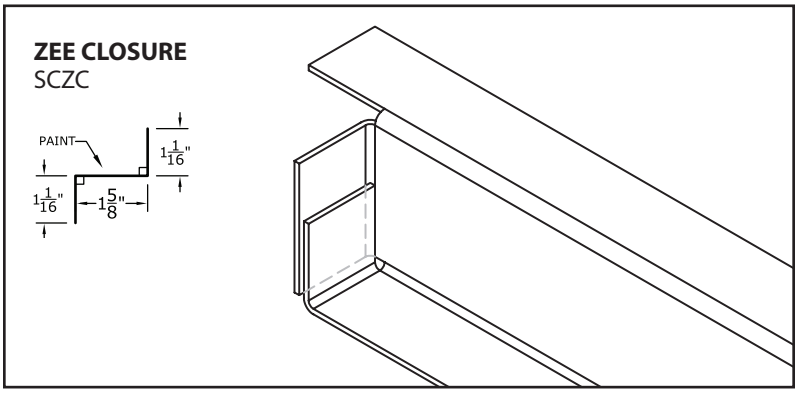

STEP 7

Cut the zee closure and box the zee closure so that it fits very snuggly between the vertical ribs of the panels.

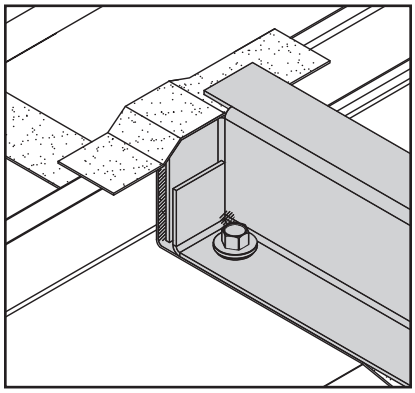

STEP 8

Fit the zee closure into place and place a fastener within 1″ of the leading edge of the vertical panel rib. Use sealant at the backside of the boxed zee and pinch point.

STEP 9

Fasten the zee into the substrate following the fastening schedule. At the trailing side fasten the vertical end of the zee closure into the supporting red iron member using a 114ZACMM at the starting and terminating panel ends.

At the leading side fasten the vertical end of the zee closure using 1 78ZACLAP; passing through the boxed zee closure, joined vertical ribs of the Central Shield 150 panel, and through the next vertical end of the boxed zee closure.

If the 78ZACLAP does not penetrate the boxed zee of the following closure, use a second 78ZACLAP from the other side.

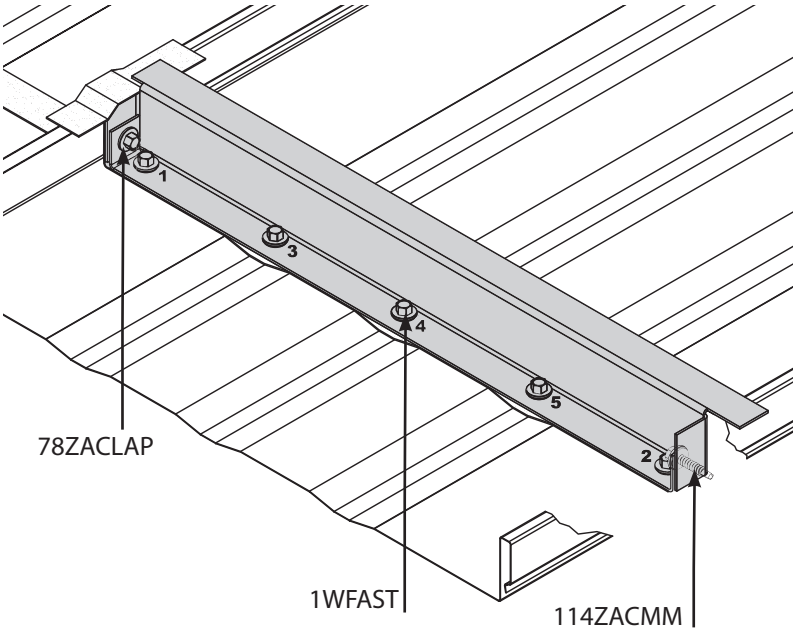

INSTALL ZEE CLOSURE

OPTION 2 3:12 PITCH AND ABOVE

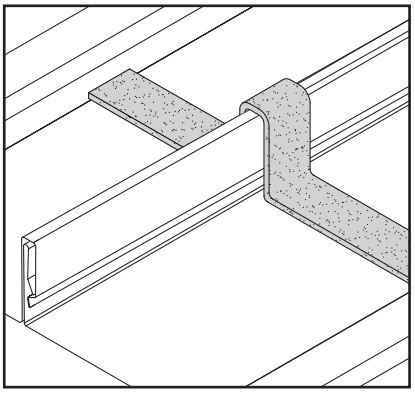

STEP 1

Apply mastic tape in a continuous line from the starting point to ending point of the zee closure line being sure to roll the mastic into the corners and striations to alleviate the chance for voids. The tape can't be stretched to forced into place. Cut butyl tape with snips or other cutting tool.

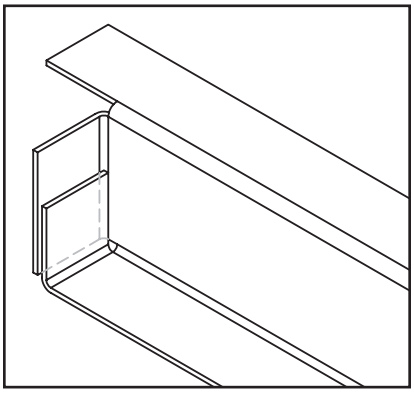

STEP 2

Cut the zee closure and box the zee closure so that it fits very snuggly between the vertical ribs of the panels.

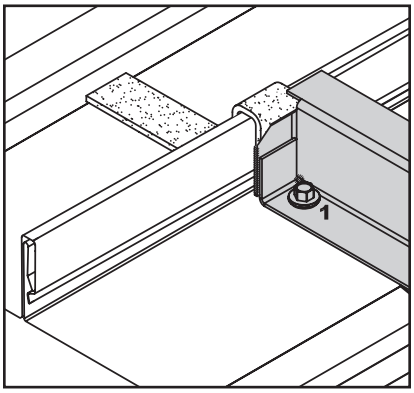

STEP 3

Fit the zee closure into place and place a fastener within 1" of the leading edge of the vertical panel rib. Use sealant at the backside of the boxed zee and pinch point.

STEP 4

Fasten the zee into the substrate following the fastening schedule. At the trailing side fasten the vertical end of the zee closure into the supporting red iron member using a 114ZACMM at the starting and terminating panel ends.

At the leading side fasten the vertical end of the zee closure using 1 78ZACLAP; passing through the boxed zee closure, joined vertical ribs of the Central Shield 150 panel, and through the next vertical end of the boxed zee closure.

If the 78ZACLAP does not penetrate the boxed zee of the following closure, use a second 78ZACLAP from the other side.

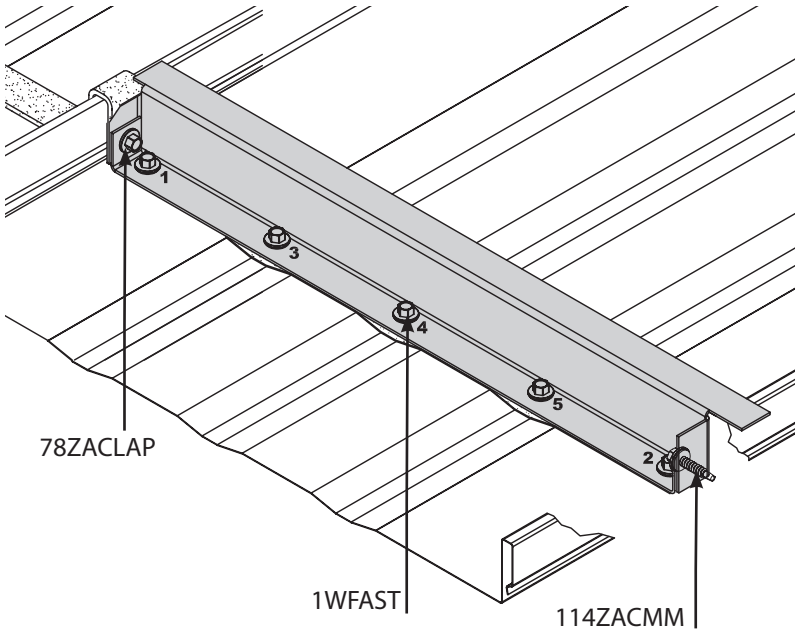

PITCH CHANGE DETAIL

FOR 3:12 PITCH AND ABOVE, APPLY ZEE CLOSURE INSTRUCTION FROM PAGE 18

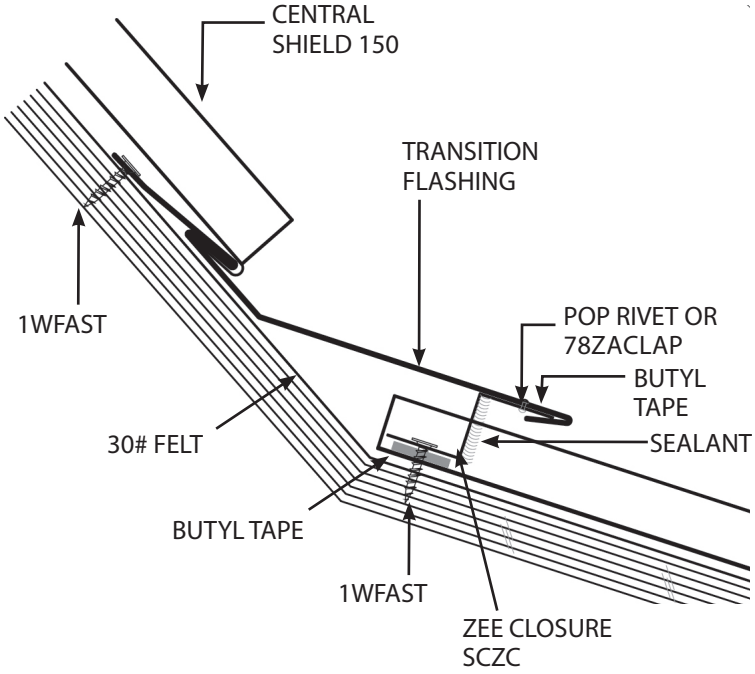

OPEN HEM GAMBREL - CFGA

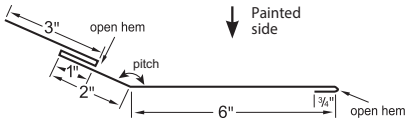

ZEE CLOSURE - SCZC

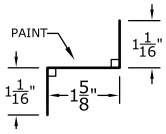

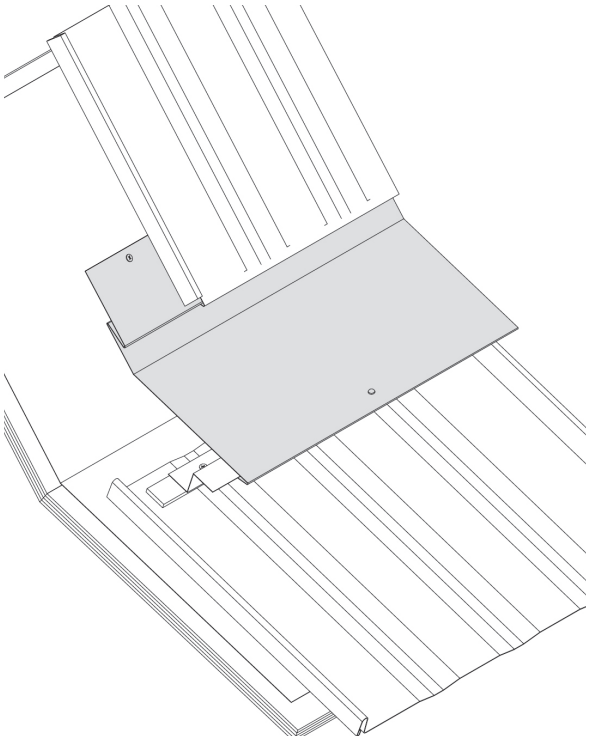

1. Place the fixed clip within 8" of the end of the Central Shield 150 panel using two 1WFAST. Using another fastener at the top of the panel fasten the panel to the substrate to keep the panel from slipping down toward the hemmed side.

2. Complete the panel run placing a 3/8" bead of sealant over the male rib at the pitch change condition then follow then zee closure procedure ensuring the transition flashing will extend beyond the edge of the zee closure and align with the plain of the up-slope area. Run a line of butyl tape atop the zee closure.

3. Fasten the transition trim to the substrate at 12" O.C. Run a line of butyl tape along the hemmed trim piece and apply the roof cleat, fastening at 12" O.C.

4. Secure the hemmed Central Shield 150 panel onto the roof cleat and place a 3/8" bead of sealant over the male rib. Keep the opposite end of the panel raised to help engage the end of the panel onto the roof cleat, then seat the female end of the panel over the male and engage the panel working form the transition trim and working up the slope. Apply the fixed clip within 6 " from the end of the up slope panel.

RAKE DETAIL

FOR 3:12 PITCH AND ABOVE, APPLY ZEE CLOSURE INSTRUCTION FROM PAGE 18

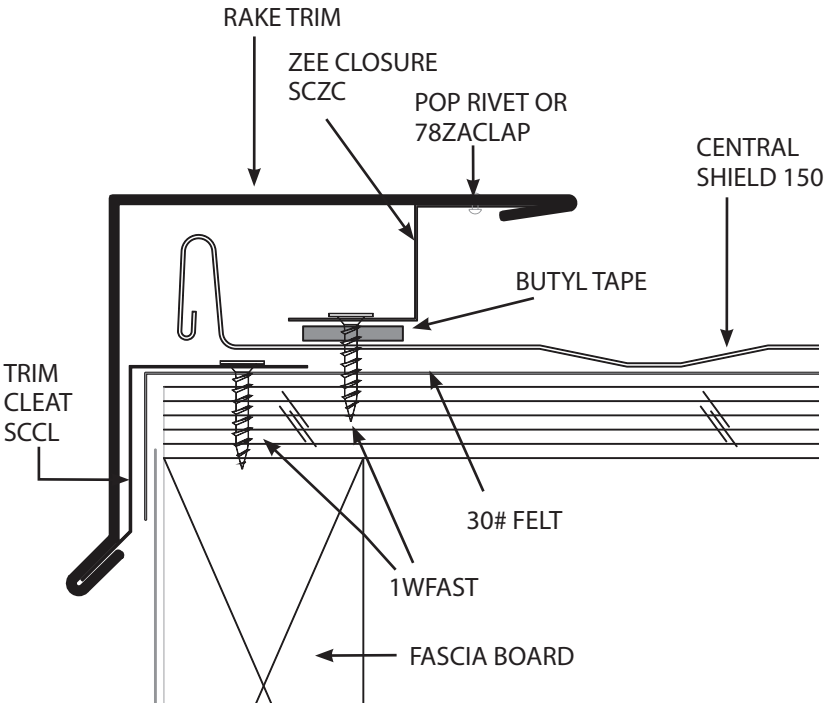

GABLE FLASHING
SCRA

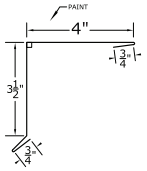

TRIM CLEAT
SCCL

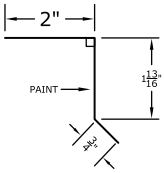

ZEE CLOSURE
SCZC

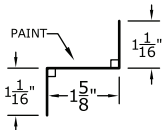

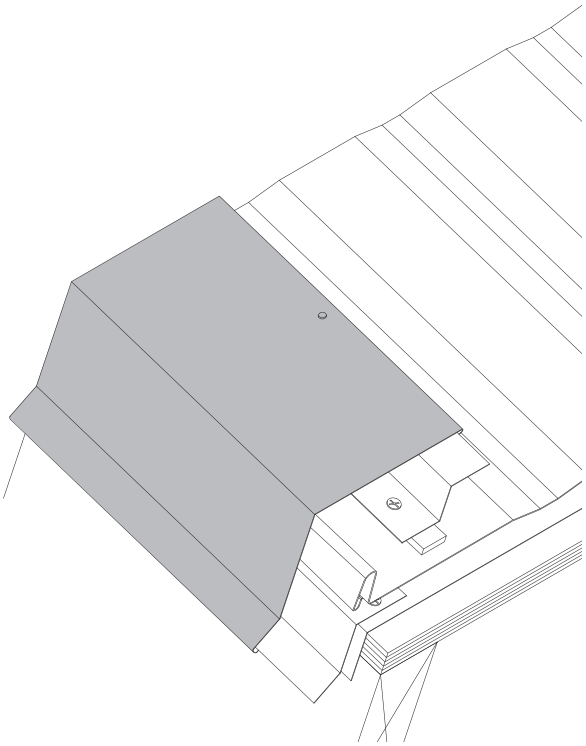

1. Install the cleat along the rake of the roof and install Central Shield™ 150 panel on top of the cleat. The edge of the panel should meet with the edge of the rake.

2. Install zee closure on top of the panel. Use butyl tape beneath to ensure proper sealing. Run the zee along the length of the rake and screw down to the panel.

3. Install the rake trim to the cleat and zee closure by snapping the open hems of the rake trim over the cleat and zee. Pop rivet the rake to the zee along the joints and every 5 feet along the rake. Overlap trims a minimum of 2" with butyl tape between laps.

RIDGE/HIP DETAIL

FOR PITCH BELOW 3:12

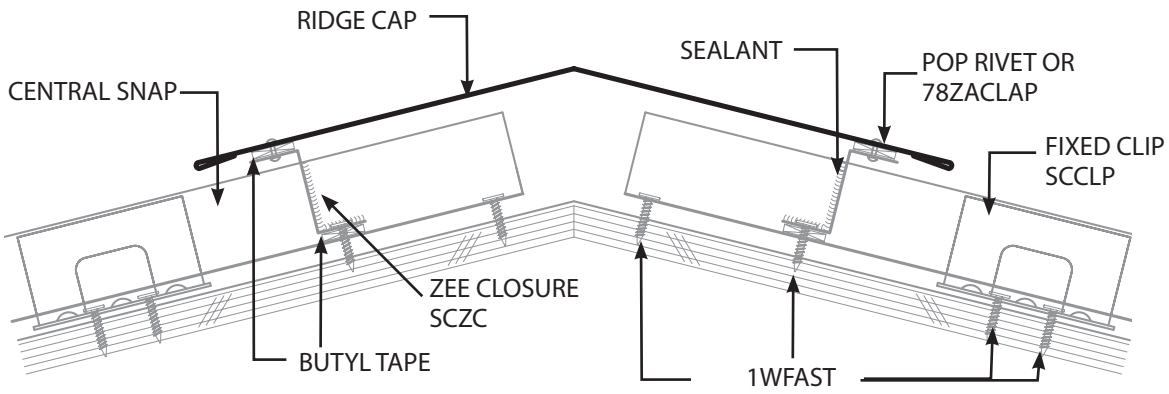

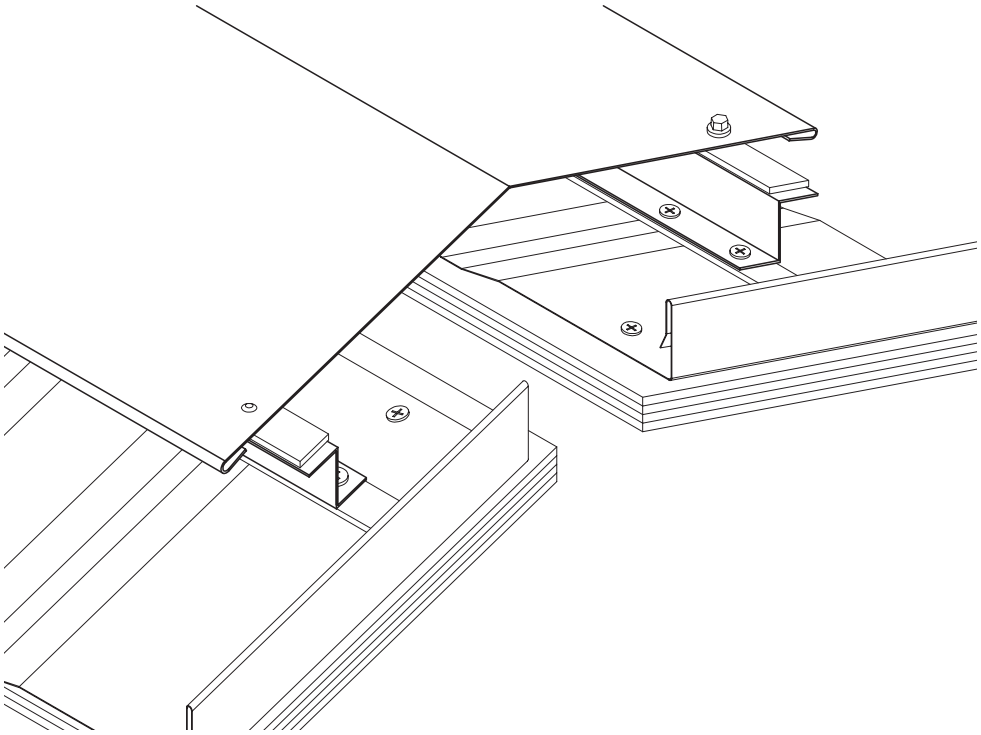

FLAT RIDGE CAP
CFFRC

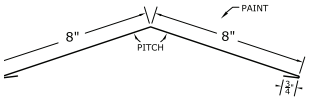

RIDGE CAP
CFRC

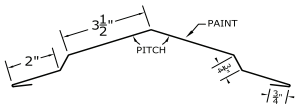

WIDE RIDGE CAP
CFWRC

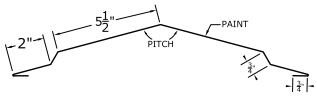

ZEE CLOSURE - SCZC

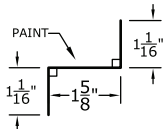

1. Place the clip within 8" of the end of the Central Shield 150 panel two 1WFAST. Using another fastener at the top of the panel fasten the panel to the substrate to keep the panel from slipping down toward the hemmed side.

2. Complete the panel run placing a 3/8" bead of sealant over the male rib at the ridge/hip condition then follow then zee closure procedure ensuring the ridge cap will extend beyond the edge of the zee closure.

3. Run a line of butyl tape atop the zee closure.

4. Place the ridge cap atop the zee closure using pop rivets or 78ZACLAP.

HIGH EAVE DETAIL

FOR 3:12 PITCH AND ABOVE, APPLY ZEE CLOSURE INSTRUCTION FROM PAGE 18

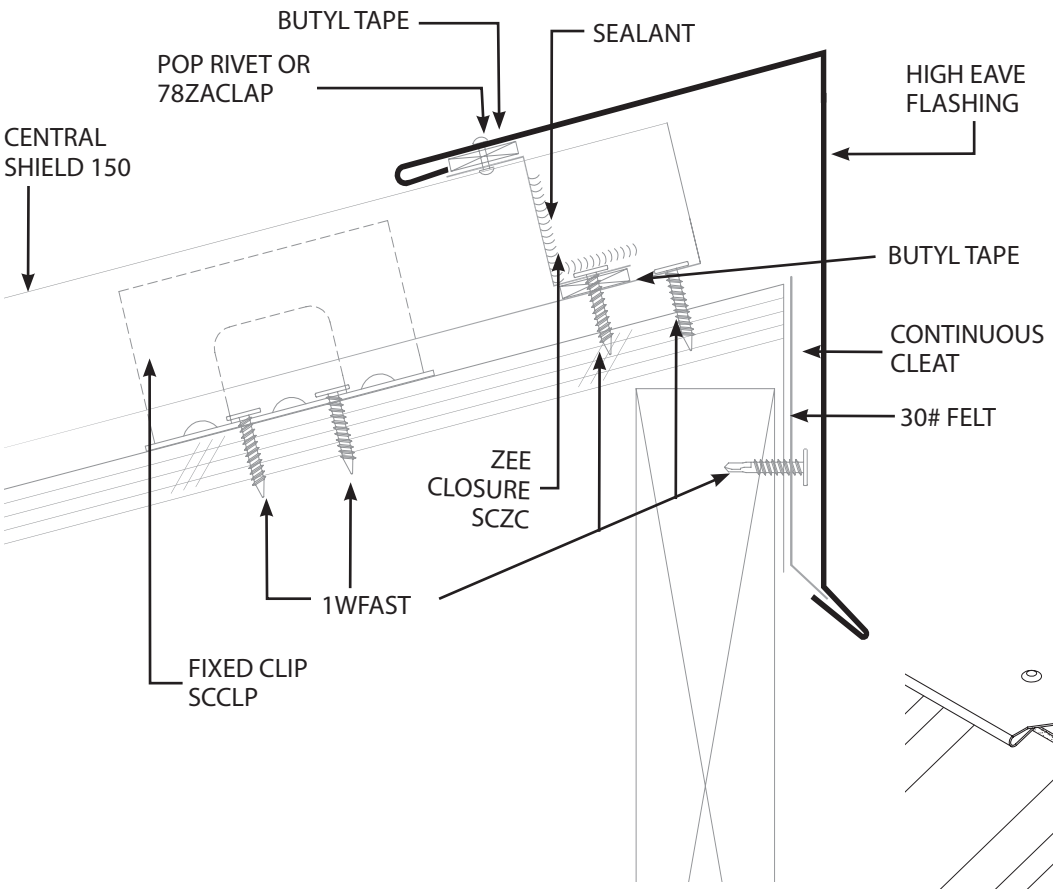

HIGH EAVE FLASHING
SCGA5

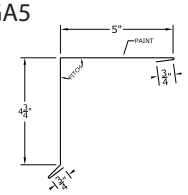

CONTINUOUS CLEAT
SSCC

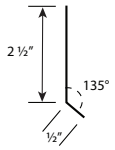

ZEE CLOSURE
SCZC

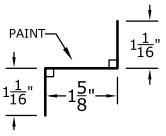

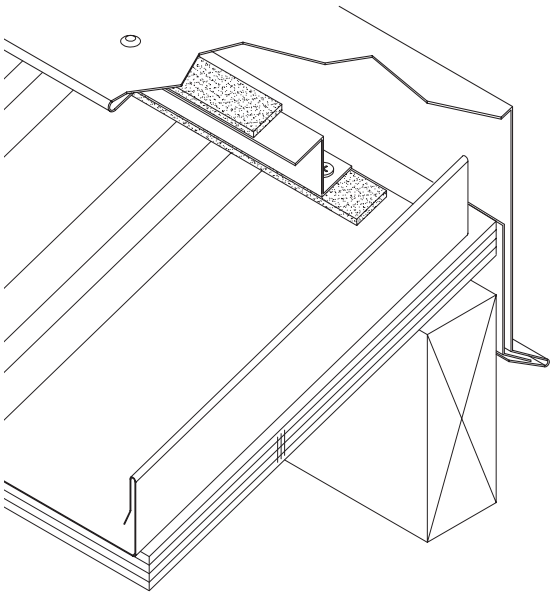

1. At 12" O.C. fasten the trim cleat to the fascia side of the condition.

2. Place the fixed clip within 8" of the end of the panel using two 1WFAST. Using another fastener at the top of the panel fasten the panel to the substrate to keep the panel from slipping down toward the hemmed side and keeping the panel end approximately 1" from the roof end.

3. Complete the panel run placing a 3/8" bead of sealant over the male rib at the high eave condition then follow then zee closure procedure ensuring the high eave flashing will extend beyond the edge of the zee closure.

4. Run a line of butyl tape atop the zee closure. Engage the open hem with the 135 degree kick out of the high eave flashing onto the continuous cleat and bring over to engage the zee closure.

5. Fasten the high eave flashing to the zee closure using either pop rivets or 78ZACLAP.

ENDWALL DETAIL

FOR 3:12 PITCH AND ABOVE, APPLY ZEE CLOSURE INSTRUCTION FROM PAGE 18

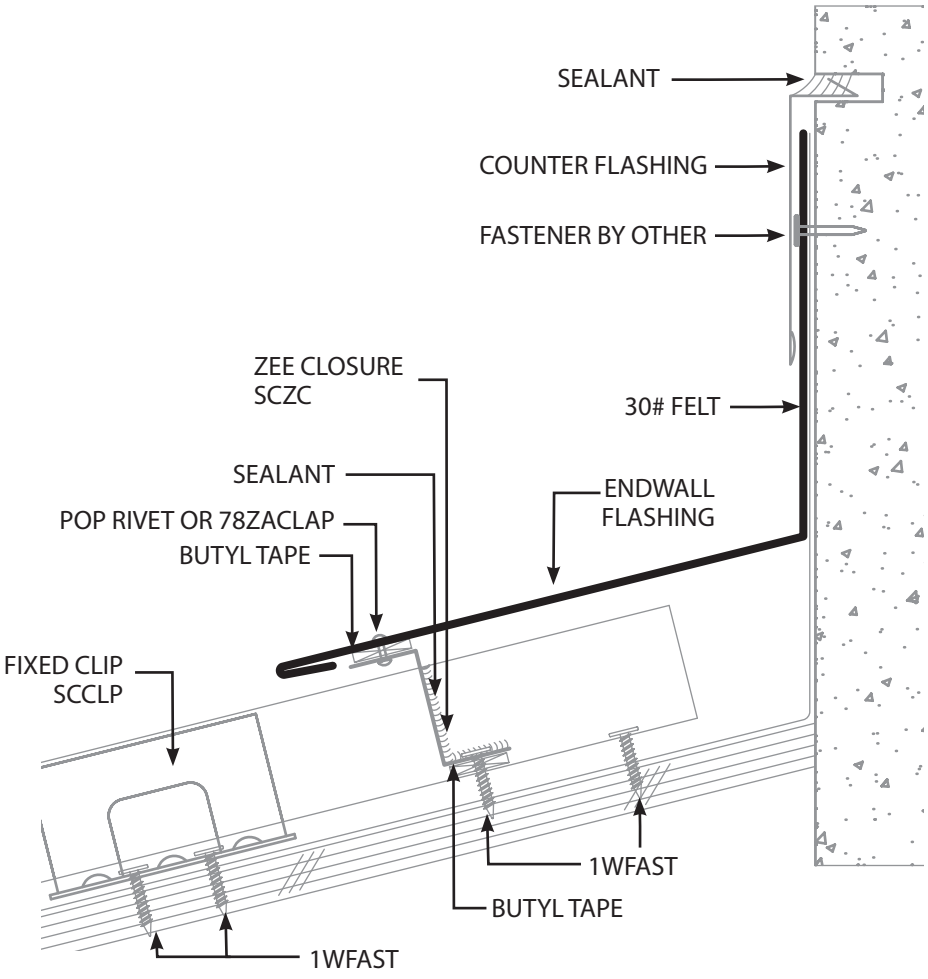

ENDWALL FLASHING
CFSI

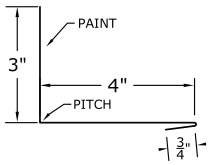

COUNTER FLASHING
SSCF

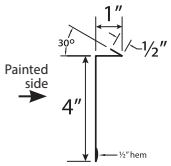

ZEE CLOSURE
SCZC

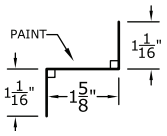

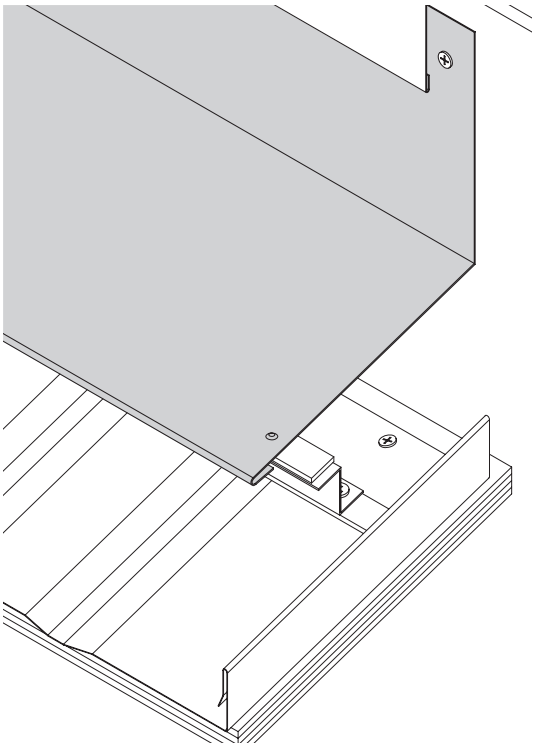

1. Place the fixed clip within 8" of the end of the panel and not more than 10" from the vertical wall using two 1WFAST.
2. Use another fastener at the top of the panel to fasten the panel to the substrate and keep the panel from slipping down toward the hemmed side.
3. Complete the panel run placing a 3/8" bead of sealant over the male rib at the endwall condition then follow the zee closure procedure ensuring the endwall flashing will extend beyond the edge of the zee closure. Run a line of butyl atop the zee closure.
4. Place the endwall flashing against the vertical wall and then fasten to the zee closure with a pop rivet or 78ZACLAP. Apply wall siding over the endwall flashing, or use counter flashing by cutting into the substrate and filling with sealant.

We promise to improve your business by accurately providing quality products right when you need them. Every time.

Visit our website for more product information, testing, installation guides, energy ratings, warranties, photo gallery, color visualizer, and more.

centralstates**co**.com

CENTRAL® STATES MANUFACTURING, INC.
METAL BUILDING COMPONENTS

centralstates**co**.com

Copyright © 2026, Central States Manufacturing, Inc., All Rights Reserved.