EVALUATION REPORT OF
CENTRAL STATES MANUFACTURING, INC.
'24 GA. 1-1/2" SNAP LOCK PANEL'

FLORIDA BUILDING CODE 8TH EDITION (2023)
FLORIDA PRODUCT APPROVAL
FL 47544.1
ROOFING
METAL ROOFING

Prepared For:
Central States Manufacturing, Inc.
302 Jane Place
Lowell, AR 72745
Telephone: (800) 356-2733
Fax: (800) 356-2971

Prepared By:
Bala Sockalingam, Ph.D., P.E.
Florida Professional Engineer #62240
1216 N Lansing Ave., Suite C
Tulsa, OK 74106
Telephone: (918) 492-5992

This report consists of
Evaluation Report (3 Pages including cover)
Installation Details (1 Page)

Report No. C2907-1
Date: 6.11.2025

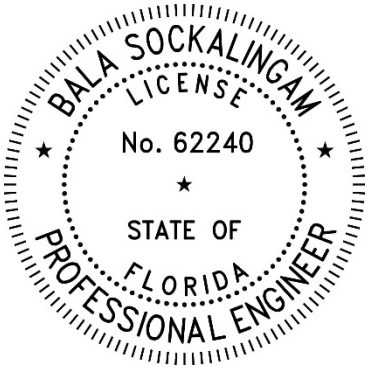

This item has been digitally signed and sealed by Bala Sockalingam, PE, on the date indicated.

Printed copies of this document are not considered signed and sealed and this signature must be verified on any electronic copies.

2025.06.11
14:04:01 -05'00'

Manufacturer:	Central States Manufacturing, Inc.
Product Name:	1-1/2" Snap Lock Panel
Panel Description:	Snap lock standing seam panel with max. 16" wide coverage and 1.5" high ribs
Materials:	Minimum 24 ga., 50 ksi steel. Galvanized coated steel (ASTM A653) or Galvalume coated steel (ASTM A792) or painted steel (ASTM A755). Corrosion resistant as per FBC 2023 Section 1507.4.3.
Deck Description:	Min. 15/32" thick APA rated plywood or min. ¾" thick wood plank (min SG of 0.42) for new and existing constructions. For HVHZ, min. 19/32" thick plywood for new constructions and min. 15/32" thick plywood for existing constructions. Designed by others and installed as per FBC 2023.
Underlayment:	Minimum underlayment as per FBC 2023 Section 1507.4.5.1. For HVHZ, minimum underlayment as per FBC 2023 Section 1518.1 and 1518.2.
Slope:	1/4:12 or greater in accordance with FBC 2023 Section 1507.4.2 For HVHZ, 2:12 or greater as per FBC 2023 Table 1515.2 or 1:12 or greater with sidelap sealant in accordance with FBC 2023 Section 1523.6.5.2.4.1.1
Design Uplift Pressure: (Factor of Safety = 2)	86.0 psf at clip spacing of 24" o.c. 108.5 psf at clip spacing of 12" o.c. 116.0 psf at clip spacing of 6" o.c.
Panel Attachment:	18 ga., 3.5" wide panel clip (1500SNS) with (2) #12-11 x 1" long pancake head screws per clip. Fastener shall be of sufficient length to penetrate through the deck a minimum of 1/4". Clips and fasteners are corrosion resistant as per FBC 2023 Section 1506.7 and 1507.4.4, respectively.
Test Standards:	Roof assembly tested in accordance with TAS 125-03 ‘Standard Requirements for Metal Roofing Systems’, TAS 100-95 ‘Test Procedure for Wind and Wind Driven Rain Resistance of Discontinuous Roof Systems’ and TAS 110-00 ‘Testing Requirements for Physical Properties of Roof Membrane, Insulation, Coatings and Other Roofing Components’.
Test Equivalency:	The test procedures in TAS 100-95 comply with test procedures prescribed in TAS 100-23

Code Compliance: The product described herein has demonstrated compliance with FBC 2023 Section 1504.3, 1507.4, 1518.9 and 1523.6.5.2.4.

Product Limitations: Design wind loads shall be determined for each project in accordance with FBC 2023 Section 1609 or ASCE 7-22 using allowable stress design. The maximum clip spacing listed herein shall not be exceeded. This evaluation report is applicable in High Velocity Hurricane Zone. Fire classification is not within scope of this Evaluation Report. Refer to FBC 2023 Section 1505 and current approved roofing materials directory or ASTM E108/UL790 report from an accredited laboratory for fire ratings of this product.

Supporting Documents: TAS 125 Test Report
Force Engineering and Testing, Inc.
Report No. 72-0108T-07 A-D, Reporting Date 3/8/2007

TAS 100-95 Test Report
Farabaugh Engineering & Testing, Inc.
Report No. T107-07, Reporting Date 1/15/2007

TAS 110-00 Test Report on Valspar Fluropon coated metal panels
PRI Asphalt Technologies
Report No. VLS-004-02-01, Reporting Date 2/22/2013
Report No. VLS-005-02-01, Reporting Date 2/22/2013

(Central States is authorized to use Metalforming Inc.'s Test Reports)

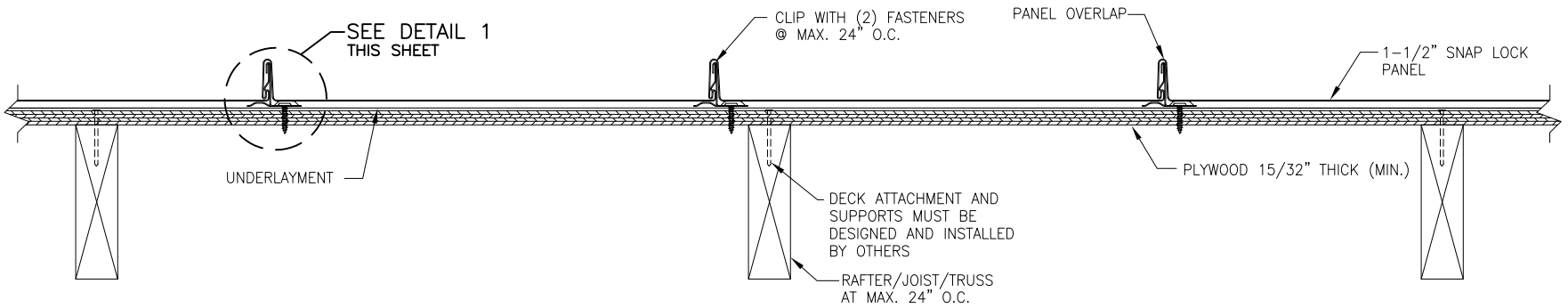

TYPICAL PANEL INSTALLATION X-SECTION

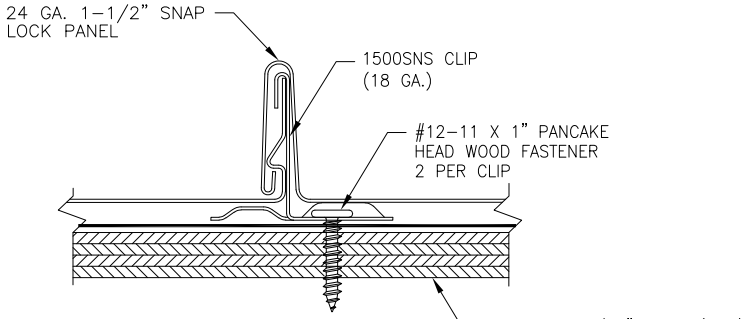

DETAIL 1

ALLOWABLE UPLIFT PRESSURE

CLIP SPACING	PRESSURE (PSF)
24"	86.0
12"	108.5
6"	116.0

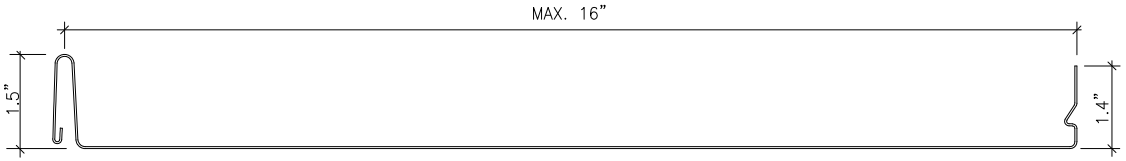

PANEL SECTION

(MIN 24 GA.)

GENERAL NOTES:

1. ARCHITECTURAL ROOF PANEL HAS BEEN DESIGNED IN ACCORDANCE WITH THE FLORIDA BUILDING CODE (FBC).
2. ROOF PANELS ARE SHALL BE MIN 24 GA. EFFECTIVE COVERING WIDTH OF PANEL = 16".
3. ROOF PANELS SHALL BE INSTALLED OVER SHEATHING & STRUCTURE AS SPECIFIED ON THIS DRAWING.
4. REQUIRED DESIGN WIND LOADS SHALL BE DETERMINED FOR EACH PROJECT. THIS PANEL SYSTEM MAY NOT BE INSTALLED WHEN THE REQUIRED DESIGN WIND LOADS ARE GREATER THAN THE ALLOWABLE WIND LOAD TABLE.
5. ALL FASTENERS MUST BE IN ACCORDANCE WITH THIS DRAWING & THE FLORIDA BUILDING CODE. IF A DIFFERENCE OCCURS BETWEEN THE MINIMUM REQUIREMENTS OF THIS DRAWING & THE CODE, THE CODE SHALL CONTROL.
6. RAFTERS/JOISTS/TRUSSES MUST BE DESIGNED TO WITHSTAND WIND LOADS AS REQUIRED FOR EACH APPLICATION AND ARE THE RESPONSIBILITY OF OTHERS.

DRAWN BY: B.S. | CHECKED BY: A.W.
PLOT: | DATE: 5/31/2025

NO.	REVISION DESCRIPTION	BY	DATE

DRAWING TITLE: 1-1/2" SNAP LOCK PANEL

MANUFACTURER
CENTRAL STATES MANUFACTURING, INC.
302 JANE PLACE
LOWELL, AR 72745
800-356-2733

CONSULTANTS
BALA SOCKALINGAM, PH.D., P.E.
1216 N LANSING AVE, SUITE C
TULSA, OK 74106
PHONE: 918-492-5992 FAX: 866-366-1543

DRAWING NO. D2907-1 | REV.

SHEET NO. 1 OF 1